BORDERLANDS 3

RACING ART BIBLE

gearbox software

TWO INCH TALL GOBLINS

ESCAPE STUDIOS

INTRODUCTION

Our racing game is set in the universe of Borderlands 3 and we aim to specifically replicate the area Lectra City which is a port-side town filled with residential housing and distant skyscrapers blocking the asteroid belt sky.

Most buildings are rundown, trash/graffiti covers every surface and the nearby powerstation leaks toxic water into the ocean.

We aim to recreate the game's style and environments while inputting our creative vision of a arcade-like closed circuit track





ARTSTYLE

Borderlands is known for its iconic comic book appearance achieved via bold saturated hand-painted textures with a notable ink outline are emphasised further with a post process outline.

This art style helps make it standout despite still using a PBR workflow.

VFX elements notably do not bend to these rules.

Due to time constraints and environment size we plan to use techniques to help speed up the texturing process.









ENVIRONMENT

TRACK LAYOUT

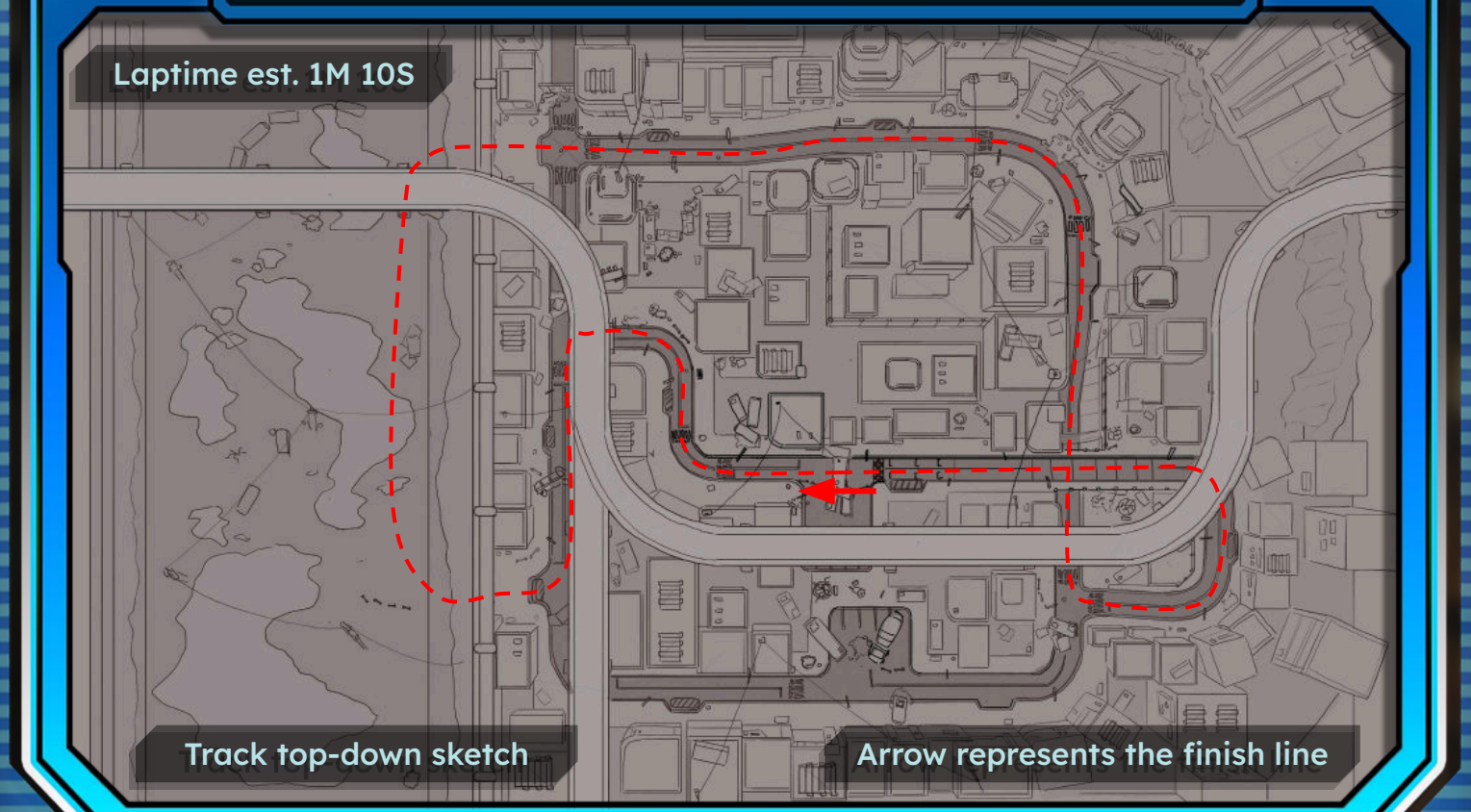

BLOCKOUT

A blockout of Lectra City and the sewer, intentionally closed circuit and designed to reuse assets as much as possible.







HERO ASSETS



Killavolt sign


Highway Overpass



BANG sign


Powerplant

LECTRA CITY - STRUCTURE



Lectra City Concept

LECTRA CITY - STRUCTURE

Modular building pieces with decals and props for variations are used to fit give each a unique feel. The large blocky buildings are inspired by brutalism and sci-fi elements.

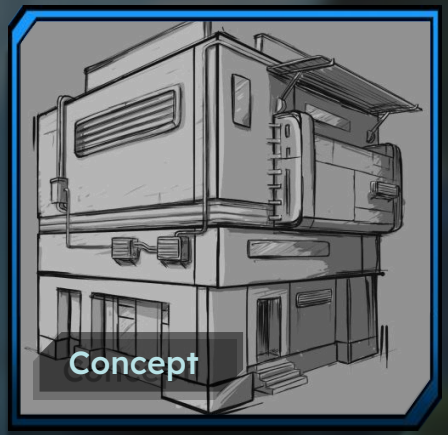









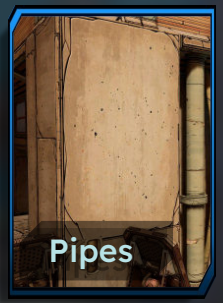



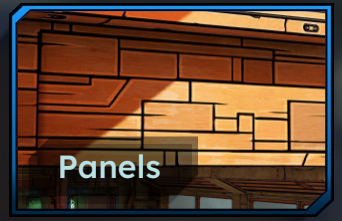



LECTRA CITY - STRUCTURE

A distinct environmental element is the Highway Overpass which epitomizes the sense of overwhelming scale the city tries to create, dwarfing the streets below.



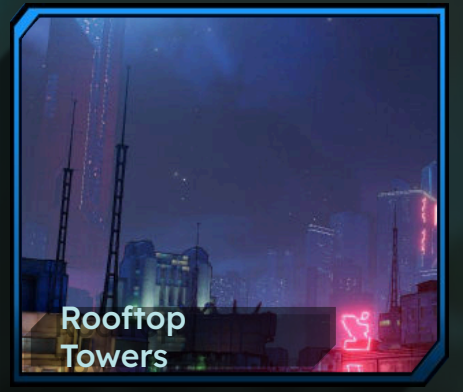



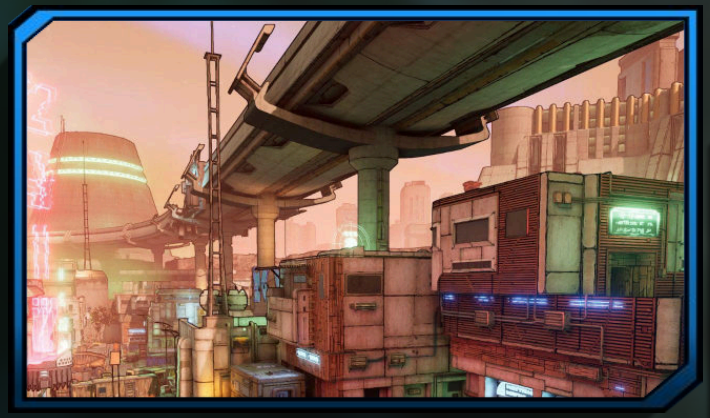

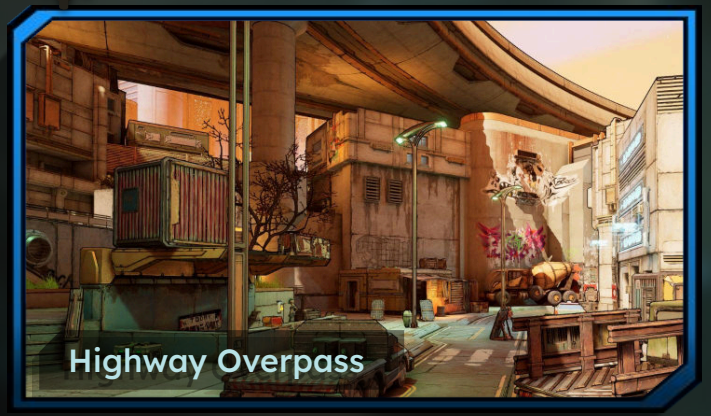



LECTRA CITY - PROPS













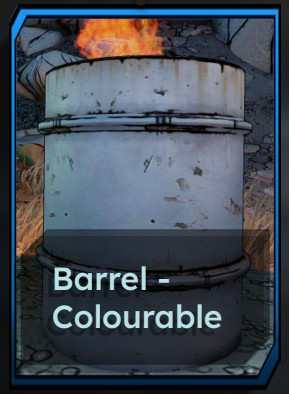







LECTRA CITY - PROPS











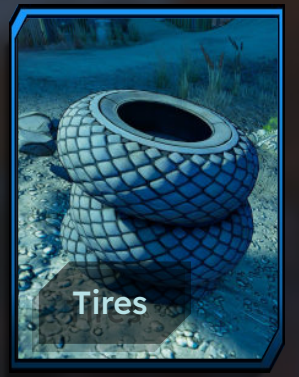



















SEWERS - STRUCTURE



Sewer Concept

SEWERS - STRUCTURE













SEWERS - PROPS

Generally wide and sparse of props except for small clumps as obstacles.


City props


Sparse Foliage

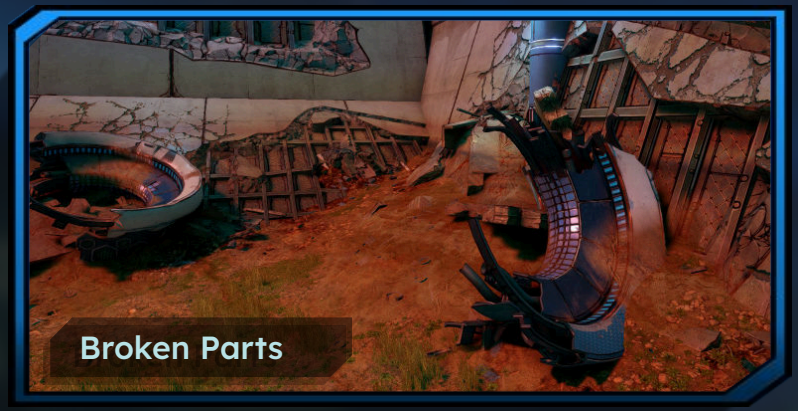
Broken Parts


Debris


Rocks


Grass

SKYBOX









DECALS

Graffiti, cracks, grunge, markings decals break up trim sheets and add fine detail.























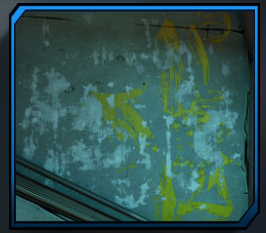







VFX

Semi-realistic 2D flipbooks for effects like flashes, fires and splashes or emissive neon distorting textures for things like signs.


Hologram






Fire







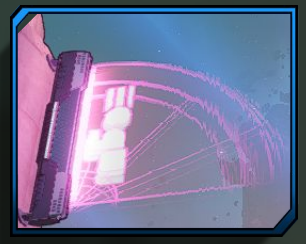





VFX

Most elements are simple sprite flipbooks or flat emissive meshes with some small ‘parts’ in destruction of vehicles.


Splash


Explosion


Trails




Flash




Booster




Dust


Spawn in

LIGHTING

The time is set in the early morning with a yellow haze from the smog, small neon signs break up the colour.








VEHICLES

VEHICLE - OUTRUNNER

A weaponized dieselpunk off-road buggy.



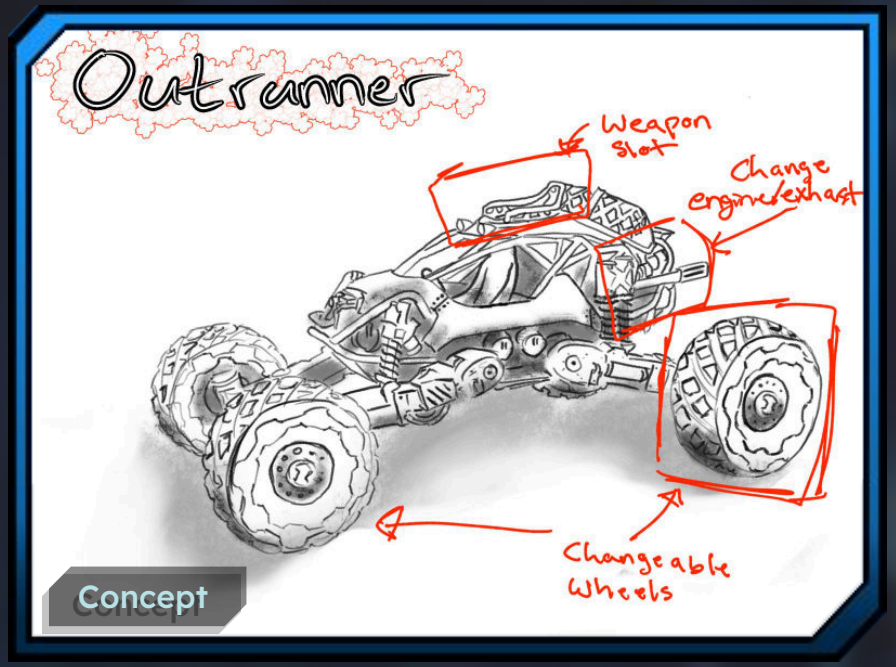



VEHICLE - TECHNICAL

A rugged offensive-focused armoured pickup.



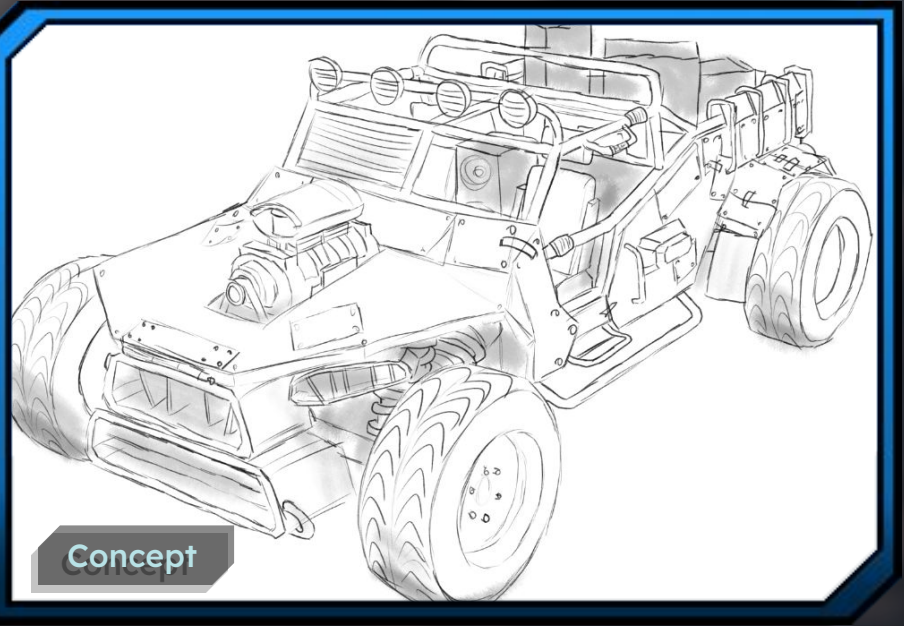

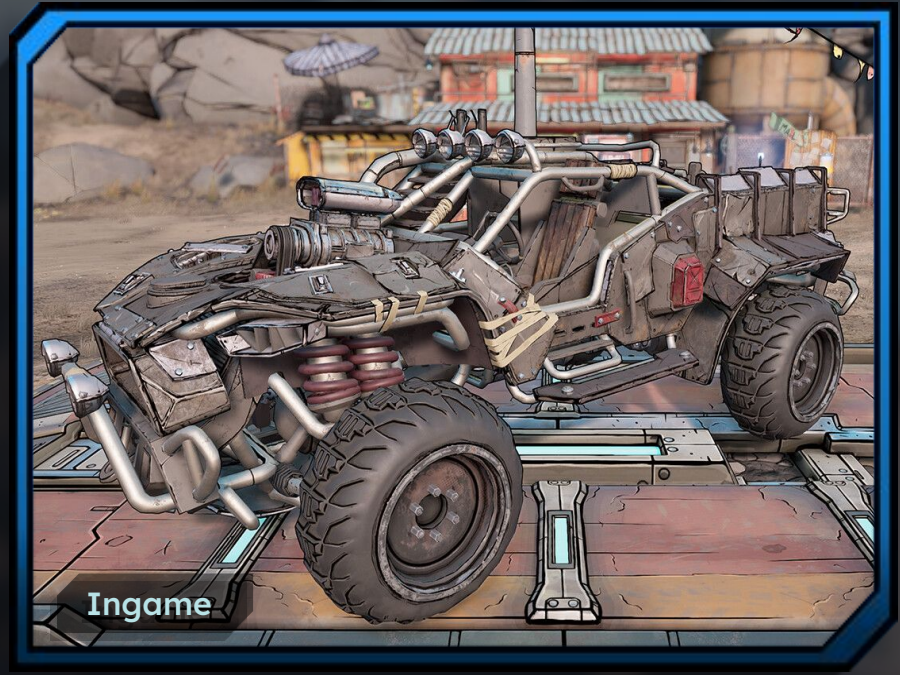

VEHICLE - MONSTER

A heavy armoured vehicle inspired by the technical and outrunner heavy armour named after the monster from Borderlands 1.


Monster BL1

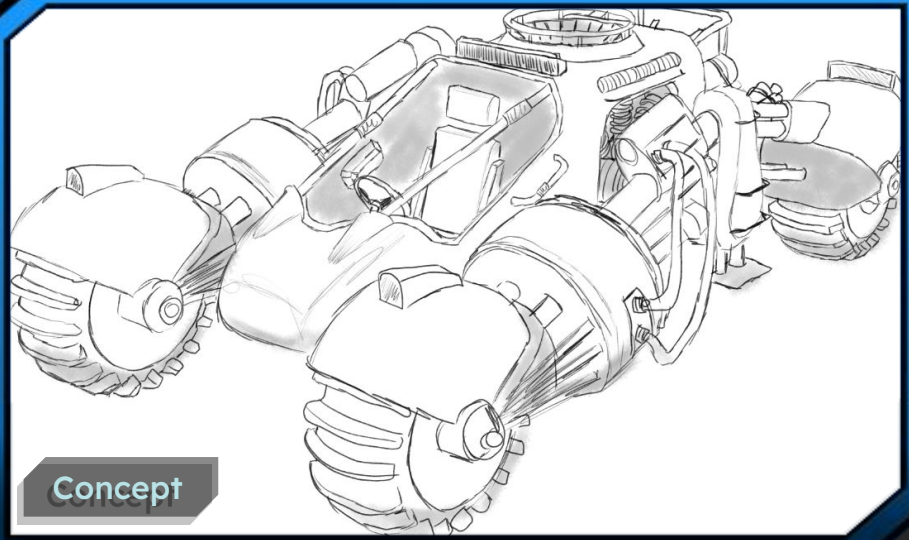
Concept


Heavy Outrunner

VEHICLE - CYCLONE

A small one-wheeler vehicle with rotary cage made for fast agility.



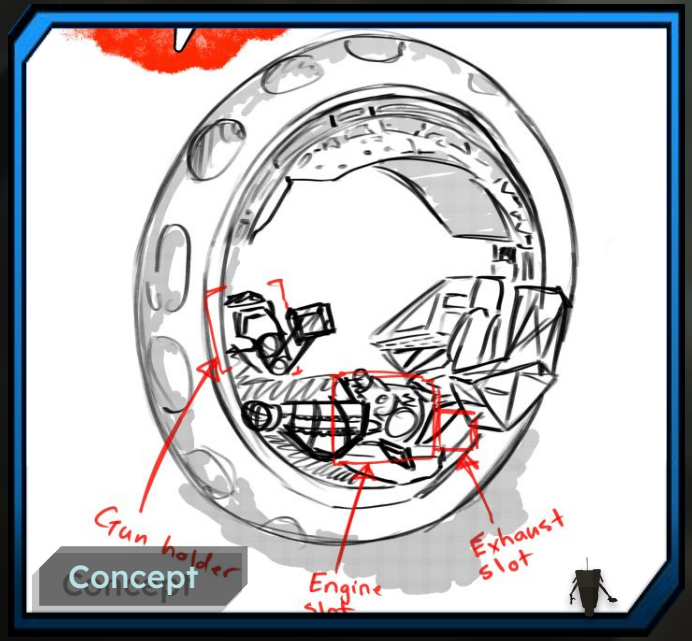




ITEMS

ITEM - HOMING MISSILE

A launchable homing missile designed by the Atlas Corporation, head directly towards the nearest player.

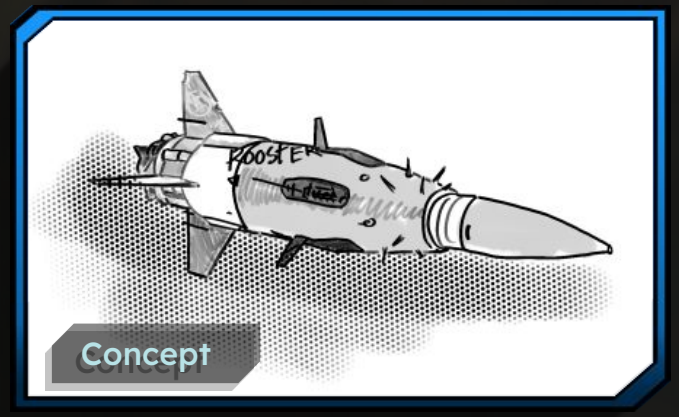

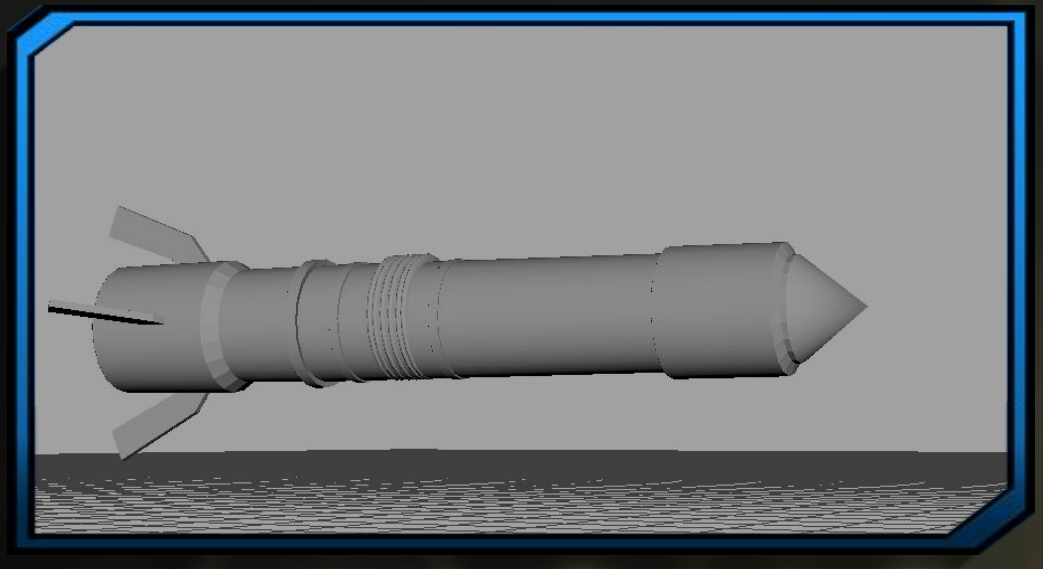



ITEM - ROCKET LAUNCHER

The rocket launcher fires a missile directly forwards hitting and blowing up anyone in its path.



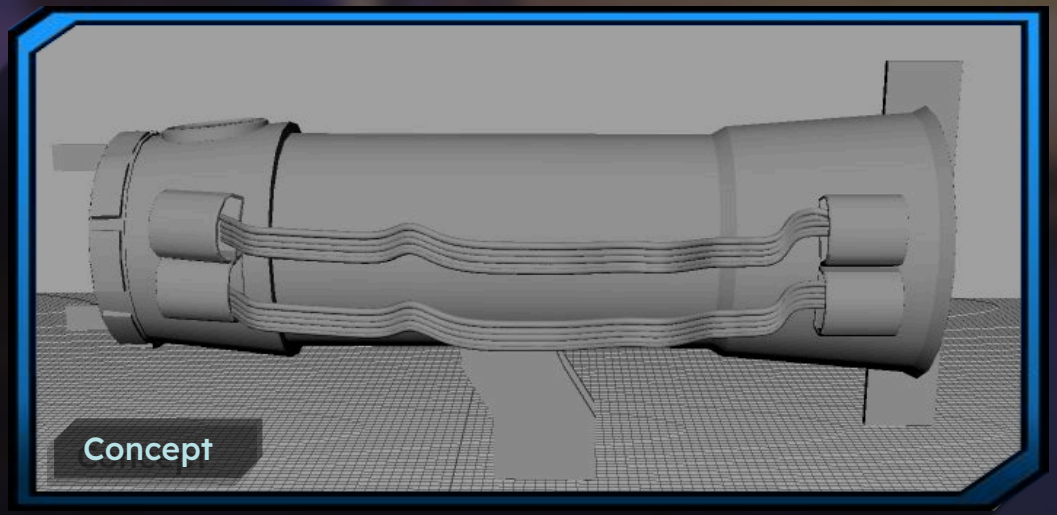



ITEM - GATLING GUN

The gatling gun sprays bullets in a cone forwards of the car before being used up.





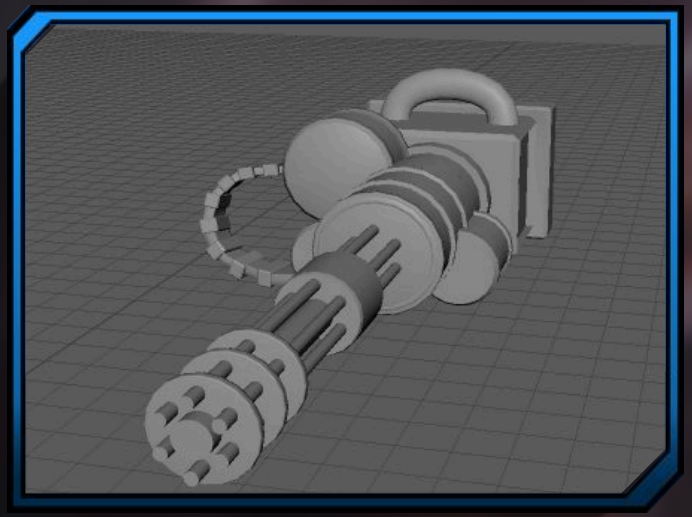



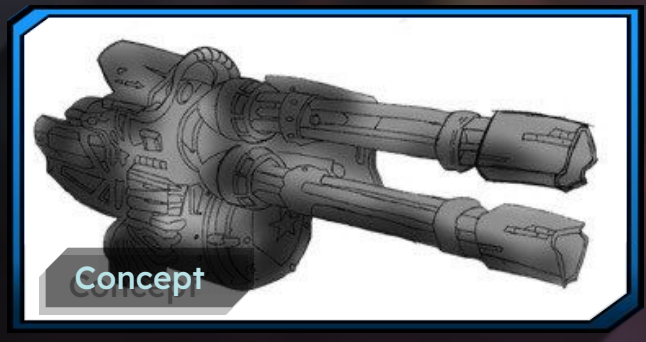

ITEM - ORBITAL STRIKE

A target appears and follows the player in first before a laser strikes from above and does damage to anyone in its radius.

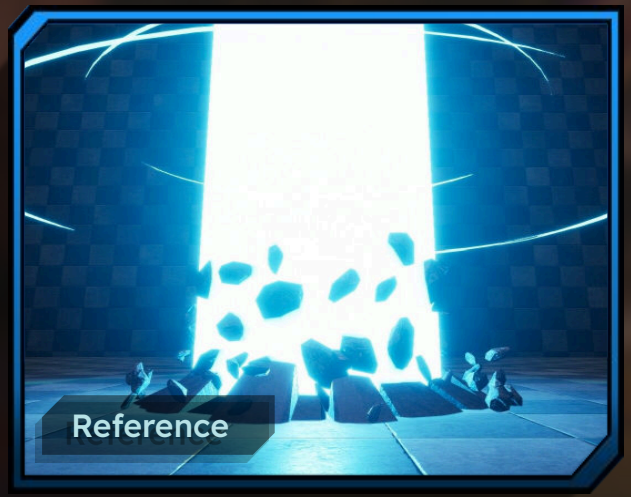
Reference


Reference

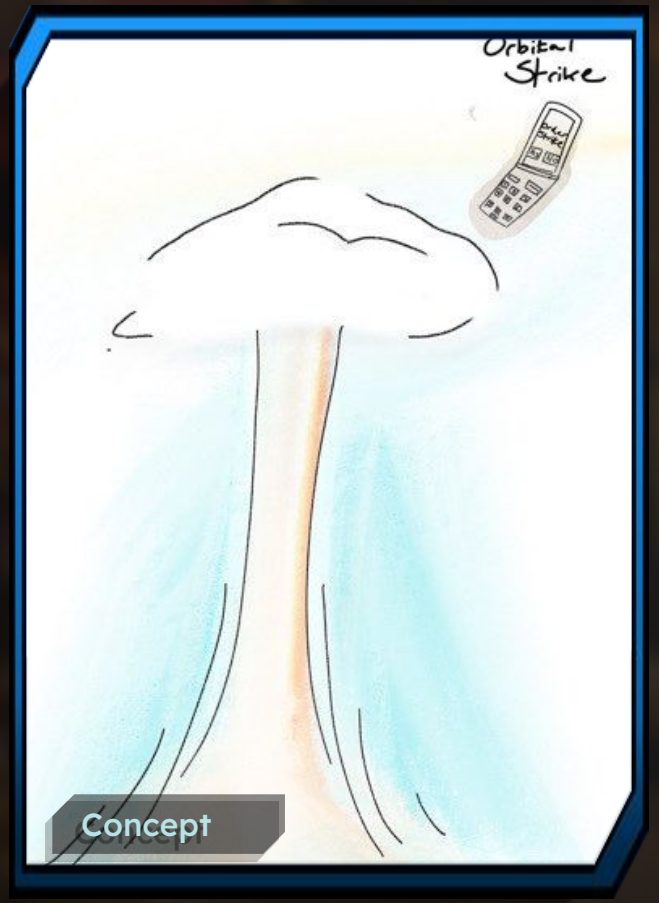

Concept

ITEM - AUTO TURRET

The auto turret attacks the closest player with a spray of bullets before being used up.

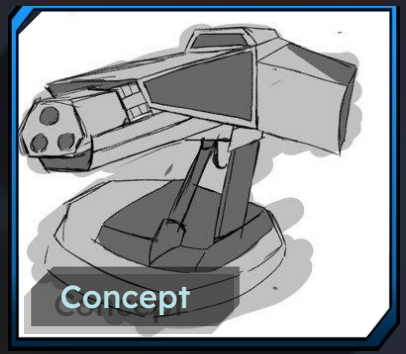

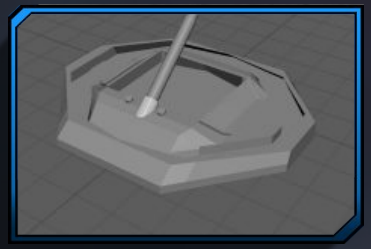



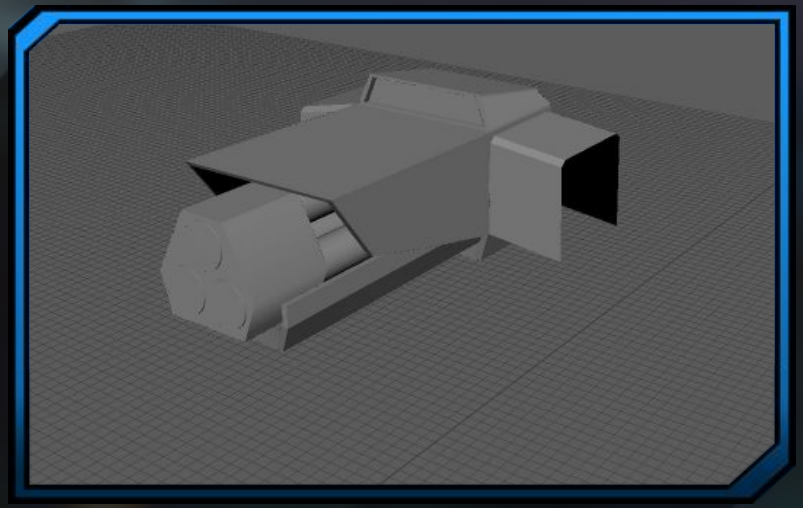

ITEM - BOOSTER

The booster is a jet engine that launches the player forwards and produces a large flame.

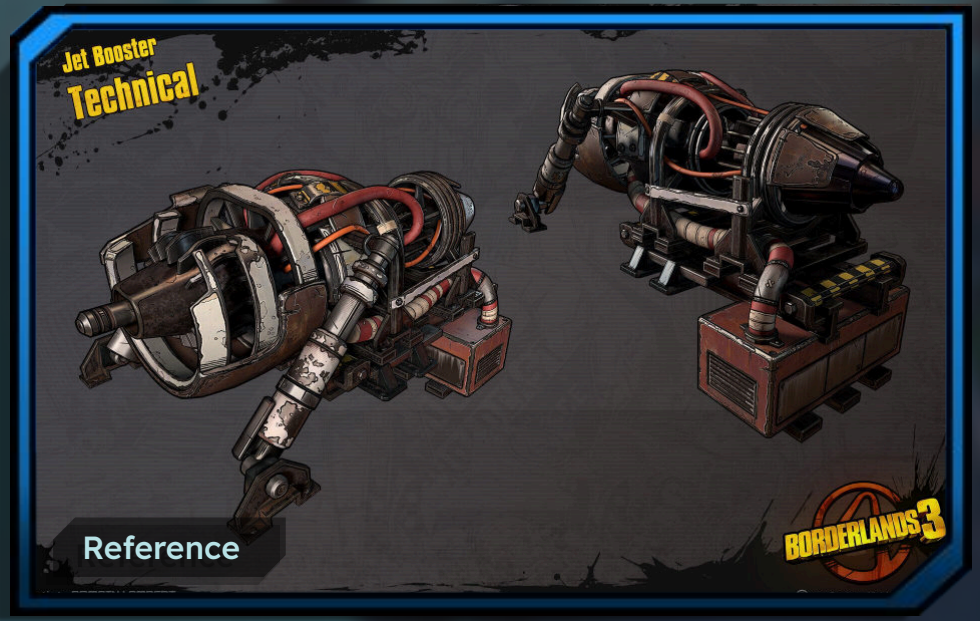



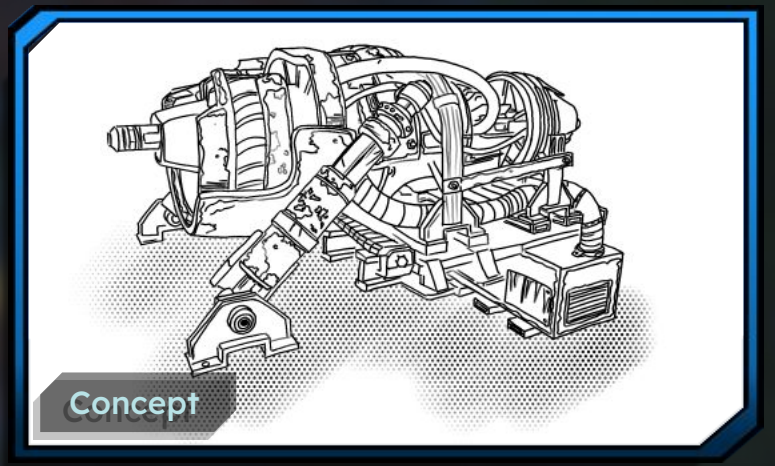

ITEM - SLOT MACHINE

The slot machine spins and gives all other players a debuff or the user a buff, like slowness, invincibility etc.

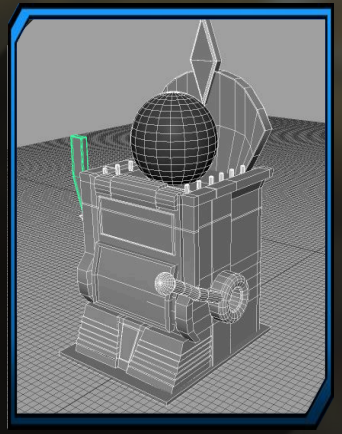

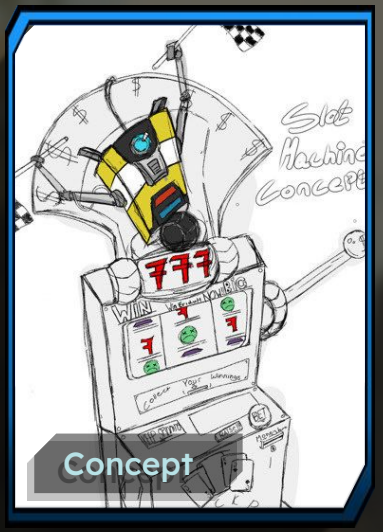





ITEM - SHIELD

The shield protects the user with a barrier from any attacks for a short time.

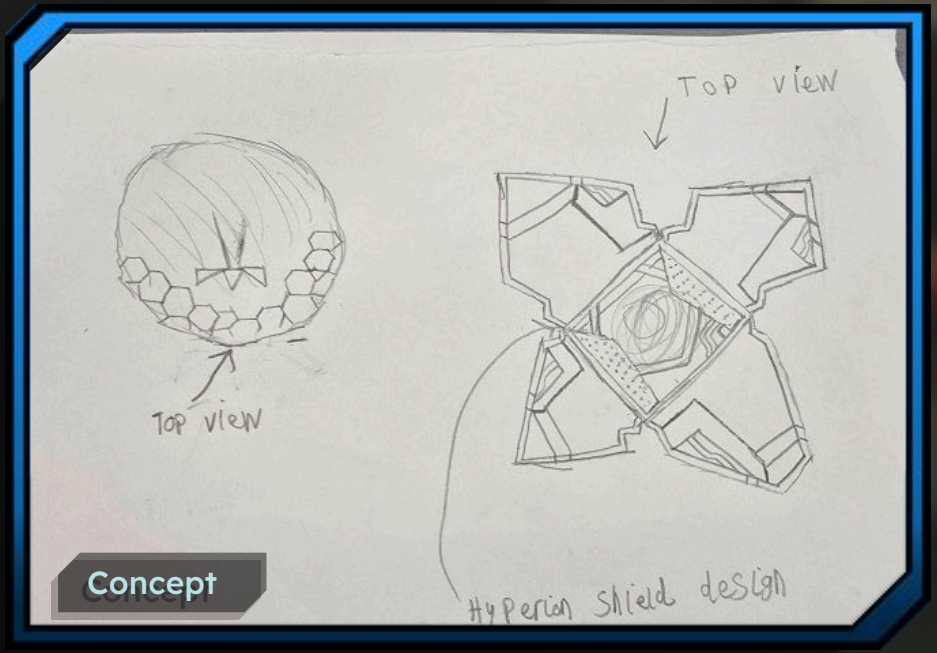










CHARACTERS

CHARACTER - PLAYER 1

Player 1 is a unique character inspired mostly by the characters of Lilith and Tiny Tina with inspiration from urban and punk aesthetics.







CHARACTER - PLAYER 2

Player 2 is a unique character inspired by female COV in particular, her outfit consists of more rugged and cobbled-together outfit.

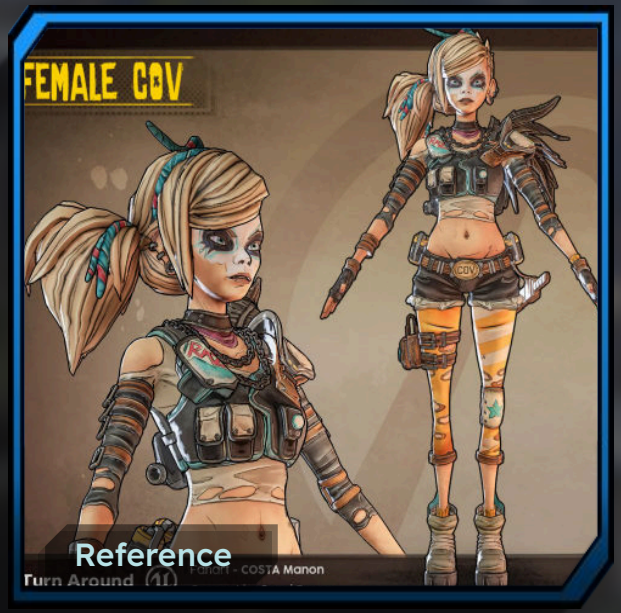





CHARACTER - FEMALE NPC

The NPC are designed to be modular, by swapping out key features like their masks and outfit colours we can create the illusion of a larger pool of unique characters.





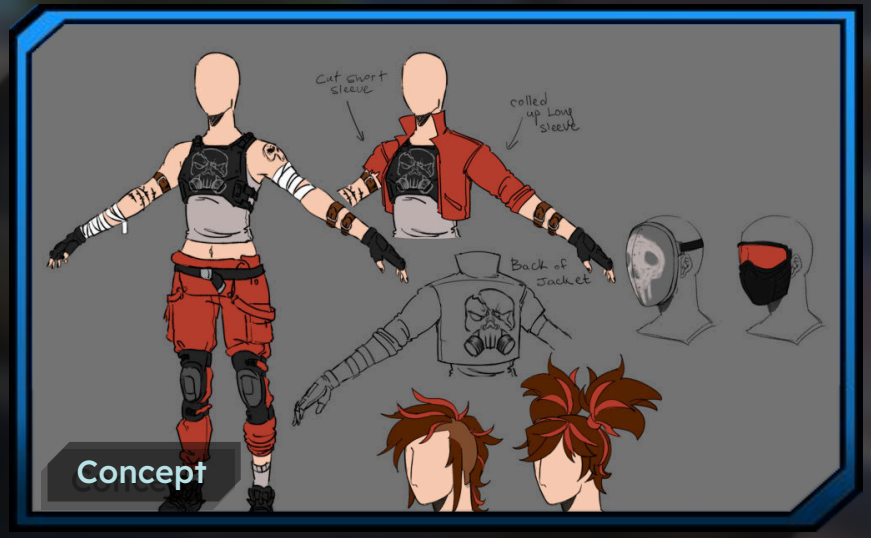

CHARACTER - MALE NPC

Since they are meant to be easy to customise we settled on one female and one male character.

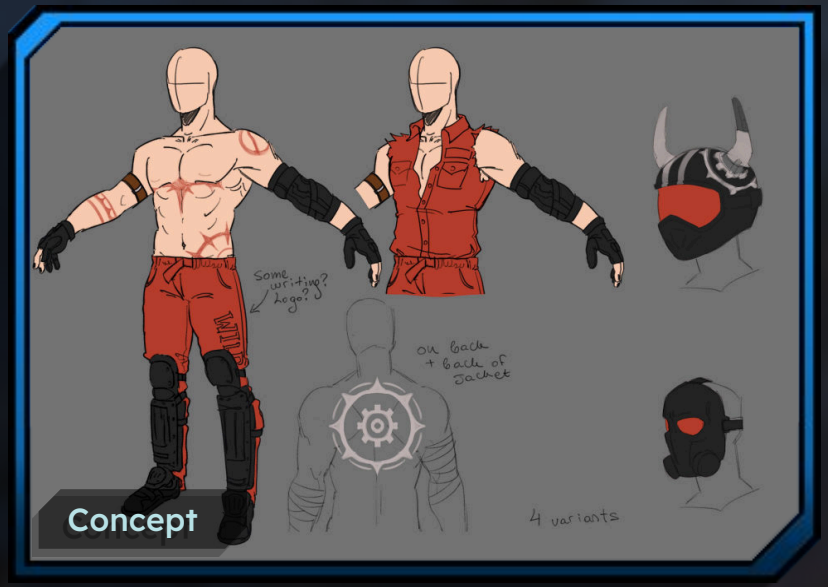

Concept


Reference

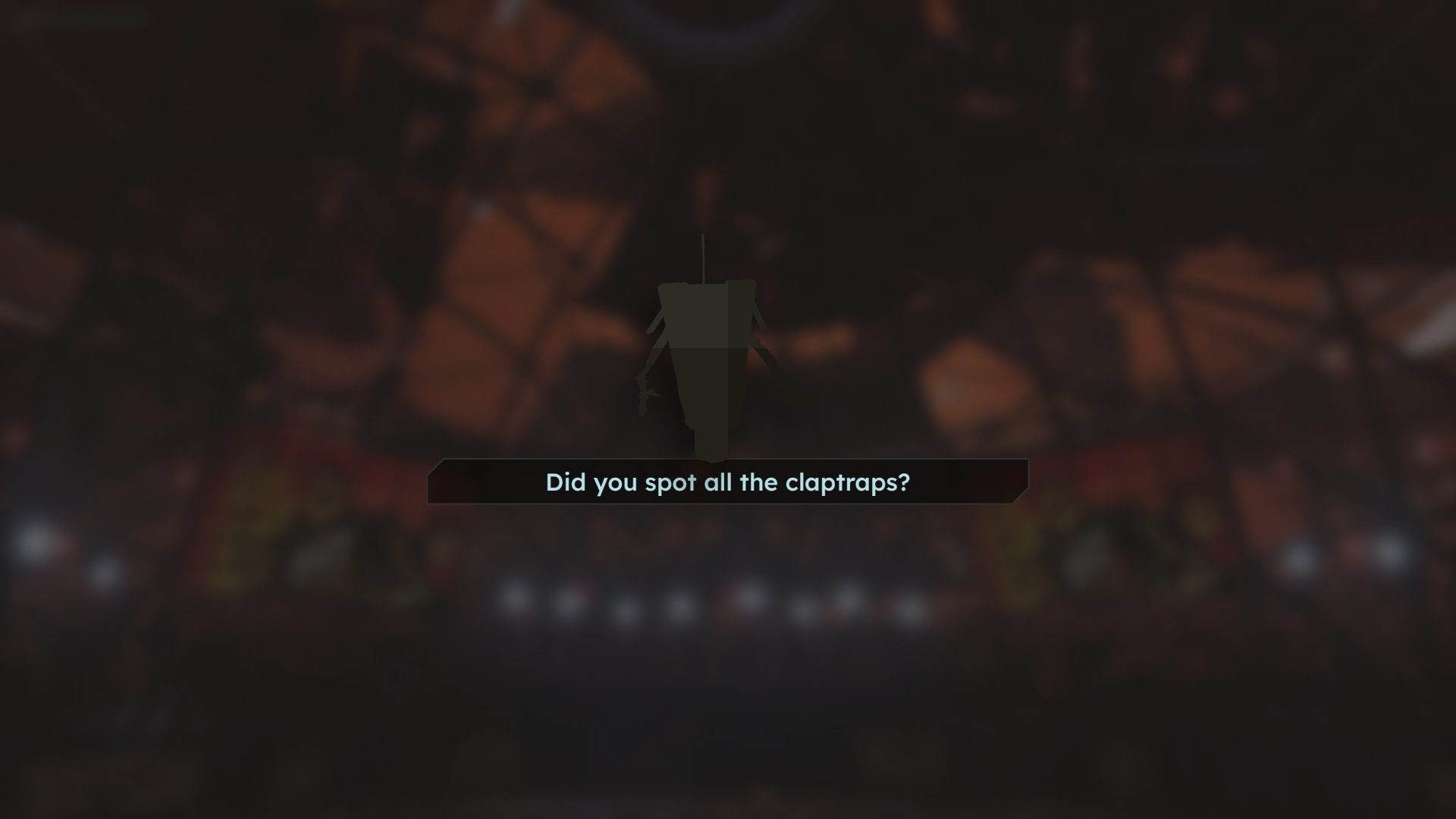
Did you spot all the claptraps?